AVAILABLE THROUGH

index-d

GHOSTOP
GS200XD
Heavy-Duty Zero-Clearance Jamb/Door Stop

GHOSTOP by Virtual Hardware

FOR PRODUCT SPECIFICATION & DEALER SUPPORT CALL YOUR ACCOUNT MANAGER OR CONTACT US : **1-877-777-0592** www.index-d.com/ghostop

PATENT PENDING

STRONG MAGNET WARNING!

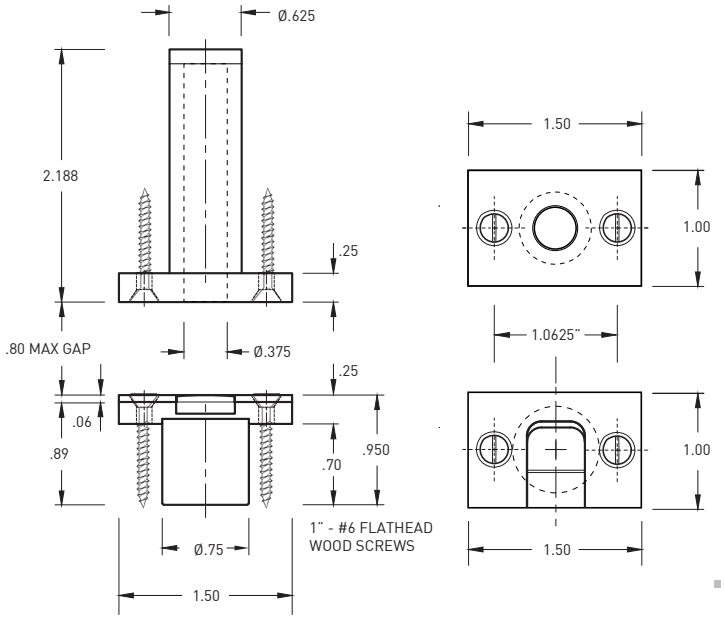

preparation

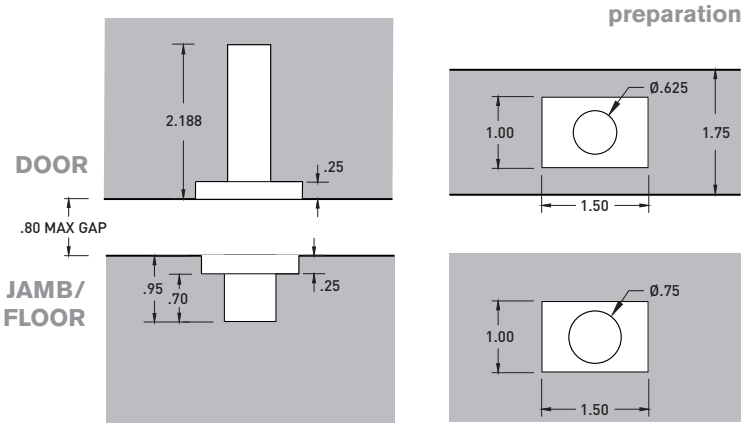

FEATURES:

The Ghostop **GS200XD** provides a positive stop in side or head jambs for heavier swing and pivot doors, where visual alignment with a straight surface is preferred. The ramp integrated in the strike makes for the smooth opening of larger doors, closets, and cabinets. Note, GS200XD does not provide a positive latch, but a minimal magnetic hold.

- maximum door/jamb gap: **.80"**
- spring-loaded retracting **stainless steel pin**
- solid milled brass pin assembly
- series 316 marine-grade stainless steel spring
- rectangular strike in stainless steel or brass
- proprietary graduated recess (the Delrin® ramp)
- concealed neodymium magnet
- decorative wood screws finished to match
- maintenance-free

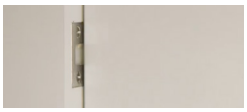

STANDARD FINISHES :

GS200XD-SSS-W	satin stainless steel with white Delrin® strike disc
GS200XD-ORB-B	US10B oil-rubbed bronze with black Delrin® strike disc
GS200XD-PCH-W	polished chrome, plated with white Delrin® strike disc
GS200XD-SNL-W	satin nickel, plated with black Delrin® strike disc
GS200XD-PNL-W	polished nickel, plated with white Delrin® strike disc
GS200XD-PBU-W	polished brass - unlacquered with white Delrin® strike disc
GS200XD-SBU-W	satin brass - unlacquered with white Delrin® strike disc
GS200XD-BLK-B	matte black with black Delrin® strike disc
GS200XD-WHT-W	matte white with white Delrin® strike disc

EXTRA STRIKE SETS, to create positive stops in both open and closed positions, include the rectangular strike coverplate, the Delrin® strike w/ramp, magnet, and fasteners. These can be ordered using product code: **GS200-SP-**XXX-X

INSTALLATION :

- Install Pin Assembly along bottom of door at desired location.
- Pin Assembly bore must be thoroughly cleaned to ensure proper operation.
- Install rectangular Strike Plate in jamb, or other surface, centered with Pin Assembly.
- Align the strike plate ramp with the pin assembly on the door swing prior to fixing the coverplate screws.

© index-d, 2021 : v.1