technical drawings

stainless steel swinging door fitting with offset pivot point
astec b.500 - registered no. 203 15 026.0 german patent office

23.04.2013

floor retainer embedded

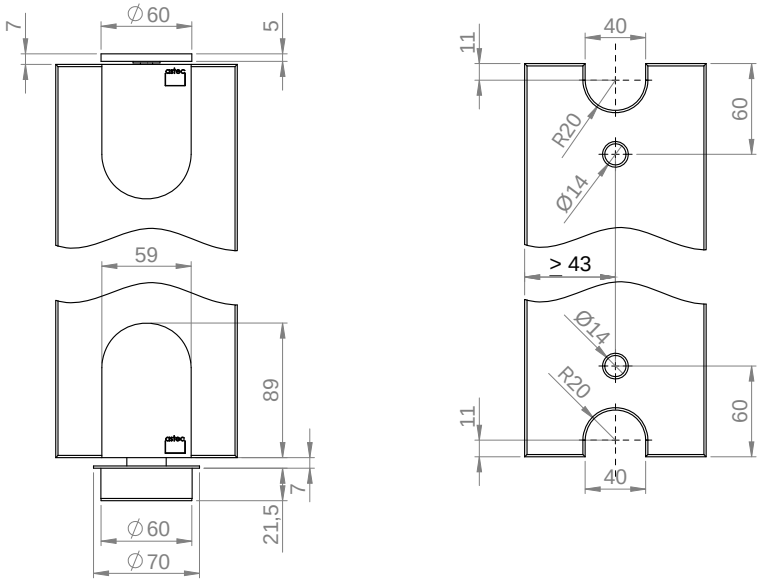

floor retainer salient

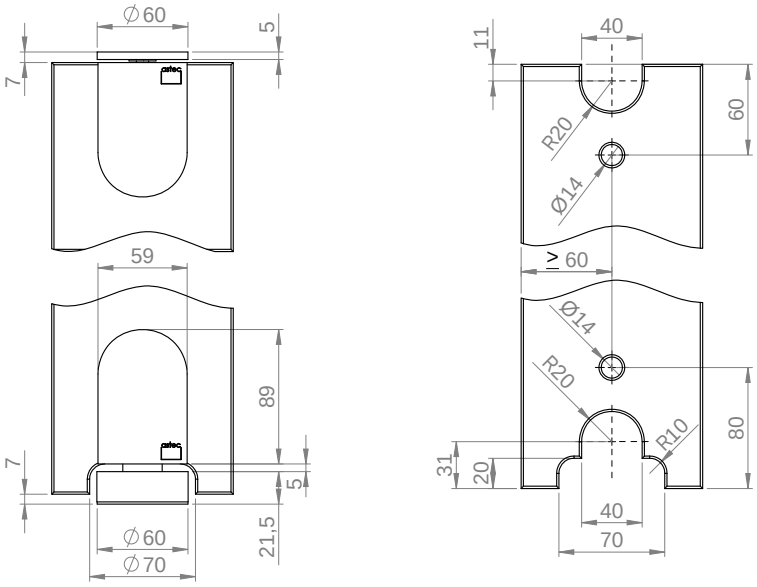

5.90.21 b.500 set for floor and ceiling retainer

astec gmbh. design beschlaege. sigmaringer str. 84. d-72458 albstadt. fon (+49)7431-1340-0. fax (+49)7431-1340-19
gf simone koch. HRB 400802 stuttgart. www.astec-design.de. info@astec-design.de

technical drawings

stainless steel swinging door fitting with offset pivot point
astec b.500 - registered no. 203 15 026.0 german patent office

23.04.2013

set 5.90.22

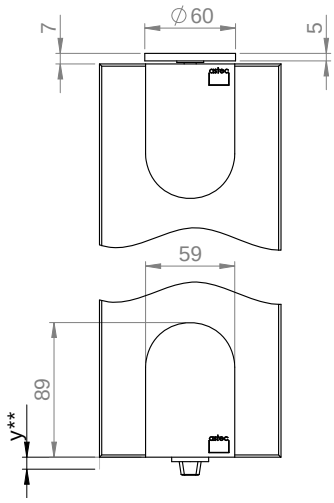

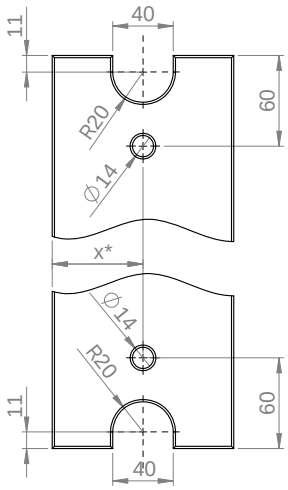

x* = depends on installed floor closer

y** = distance dimension from lower edge of glass to upper edge of finished floor depends on installed floor closer

set 5.90.23

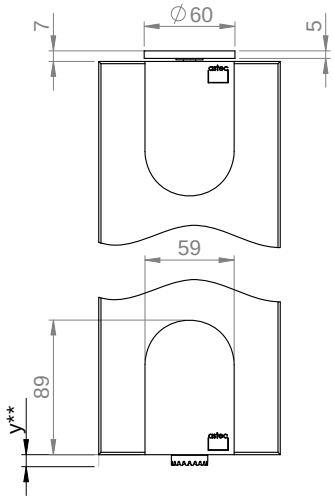

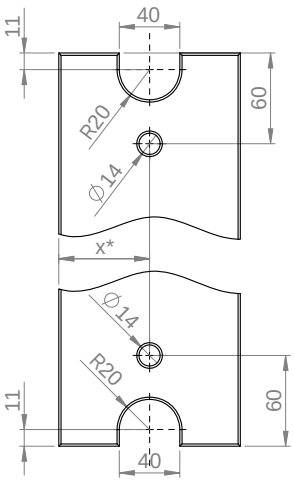

5.90.22 **b.500 set for dorma floor closer and ceiling retainer**
5.90.23 **b.500 set for geze floor closer and ceiling retainer**

astec gmbh. design beschlaege. sigmaringer str. 84. d-72458 albstadt. fon (+49)7431-1340-0. fax (+49)7431-1340-19
gf simone koch. HRB 400802 stuttgart. www.astec-design.de. info@astec-design.de

stainless steel swinging door fitting with offset pivot point
astec b.500 - registered no. 203 15 026.0 german patent office

23.04.2013

floor retainer embedded

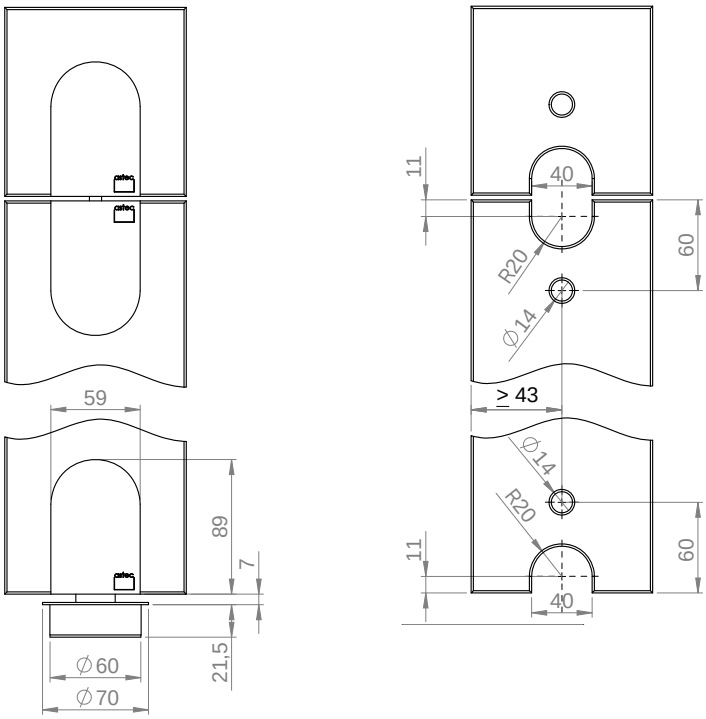

floor retainer salient

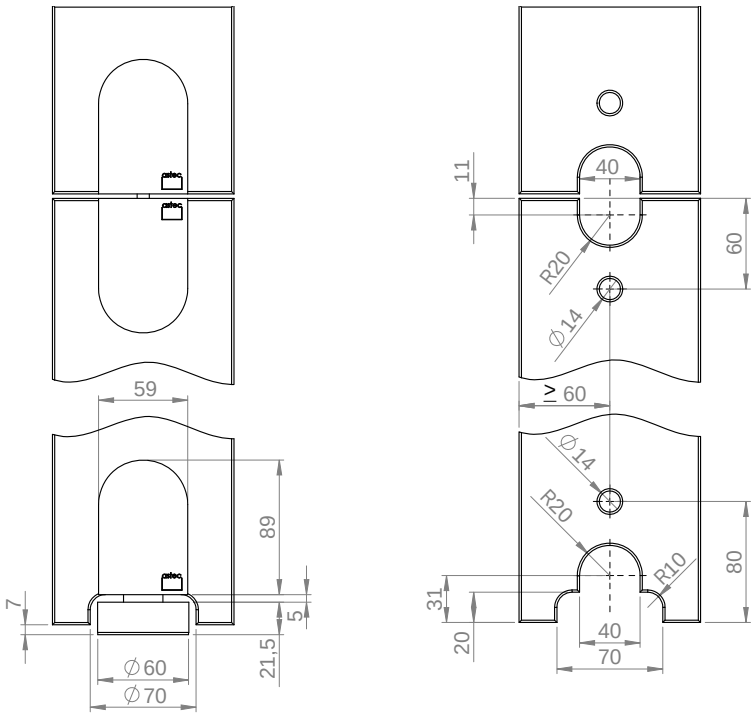

5.90.24 b.500 set for floor retainer and skylight

astec gmbh. design beschlaege. sigmaringer str. 84. d-72458 albstadt. fon (+49)7431-1340-0. fax (+49)7431-1340-19
gf simone koch. HRB 400802 stuttgart. www.astec-design.de. info@astec-design.de

stainless steel swinging door fitting with offset pivot point
astec b.500 - registered no. 203 15 026.0 german patent office

23.04.2013

set 5.90.25

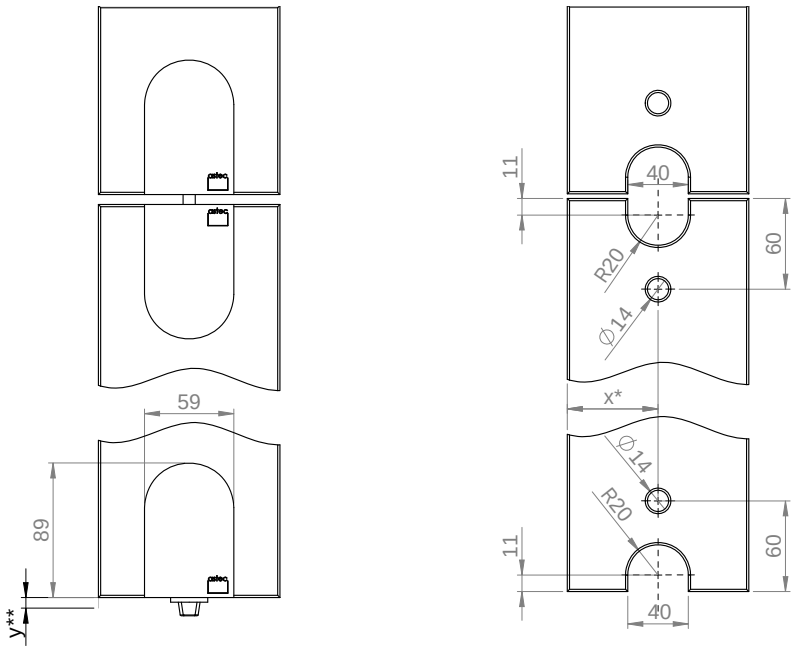

x* = depends on installed floor closer

y** = distance dimension from lower edge of glass to upper edge of finished floor depends on installed floor closer

set 5.90.26

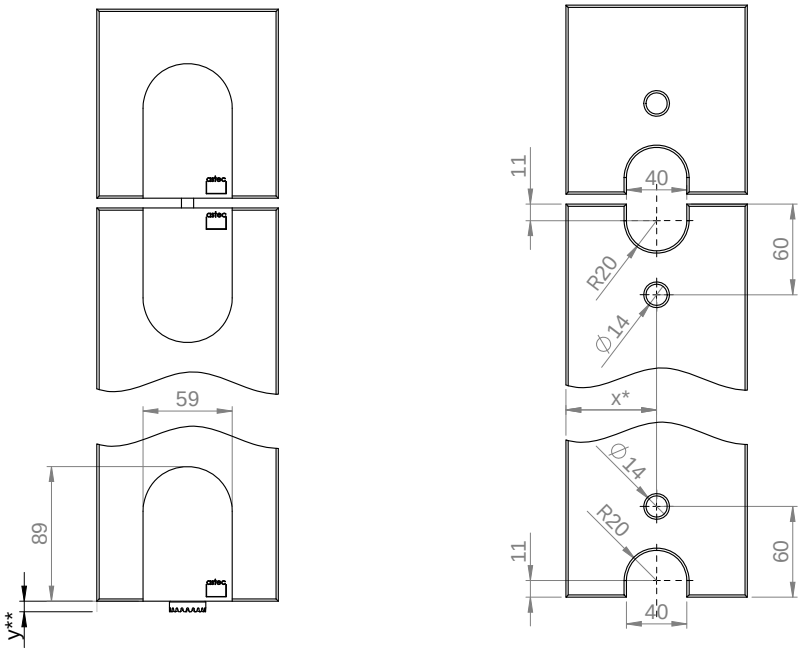

5.90.25 **b.500 set for dorma floor closer and skylight**
5.90.26 **b.500 set for geze floor closer and skylight**

astec gmbh. design beschlaege. sigmaringer str. 84. d-72458 albstadt. fon (+49)7431-1340-0. fax (+49)7431-1340-19
gf simone koch. HRB 400802 stuttgart. www.astec-design.de. info@astec-design.de

stainless steel swinging door fitting with offset pivot point
astec b.500 - registered no. 203 15 026.0 german patent office

23.04.2013

floor retainer embedded

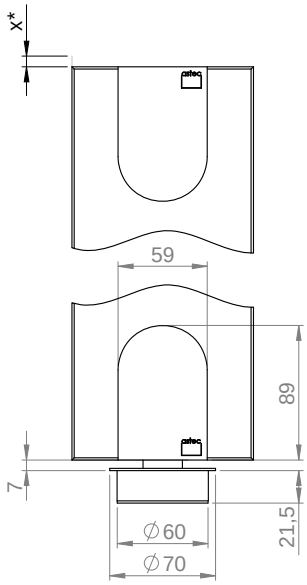

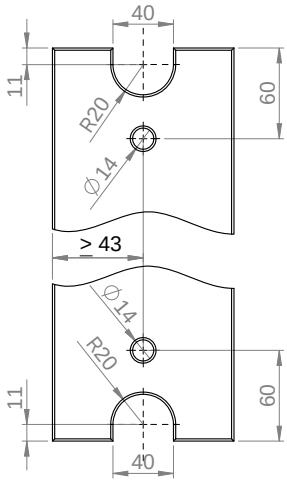

x* distance dimension from upper edge of glass to ceiling depends on installed floor closer

floor retainer salient

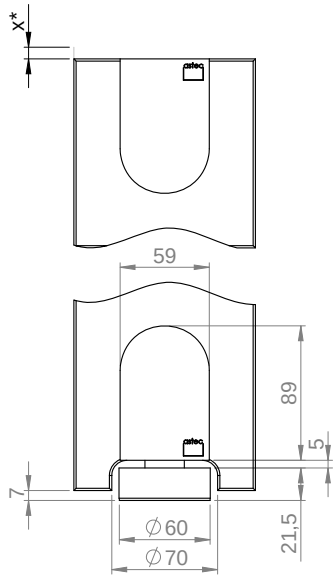

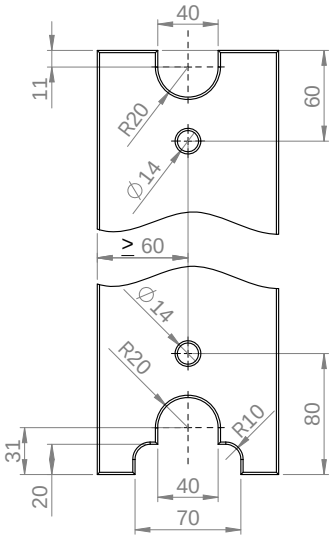

5.90.27 b.500 set for floor retainer and dorma transom closer

astec gmbh. design beschlaege. sigmaringer str. 84. d-72458 albstadt. fon (+49)7431-1340-0. fax (+49)7431-1340-19
gf simone koch. HRB 400802 stuttgart. www.astec-design.de. info@astec-design.de